XTV 3400 RPM

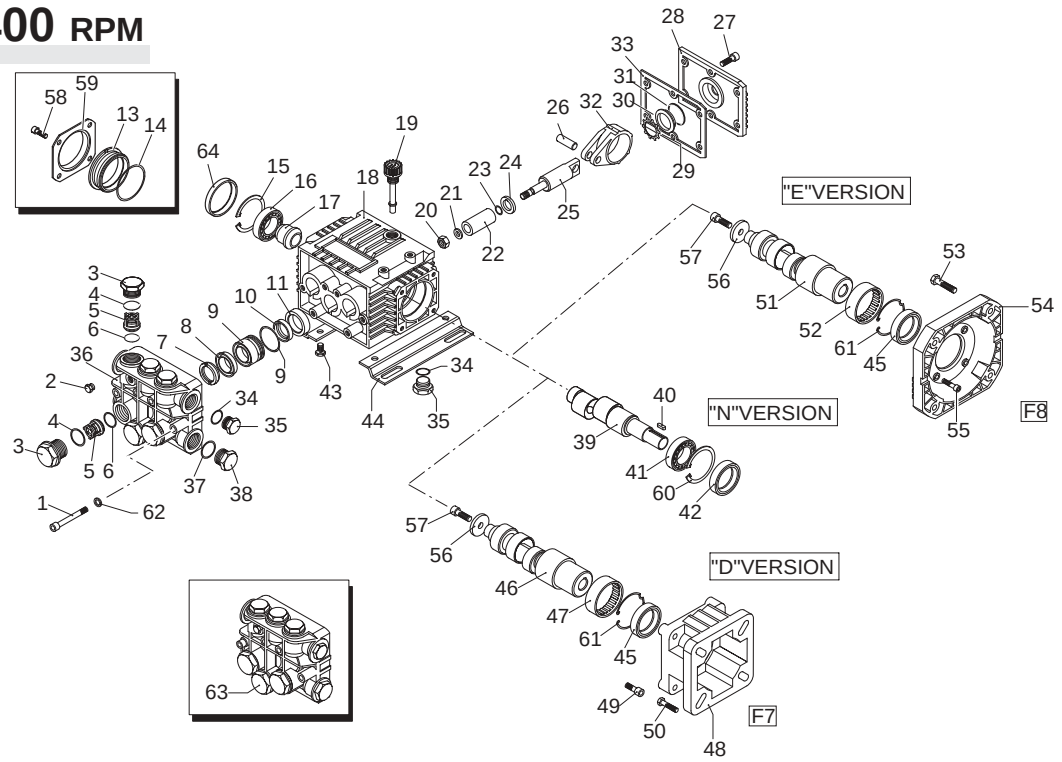

Pos.	Code	Description	Qty.
1	1322730	Head bolt (137 in/lbs)	6
2	620301	Plug	1
3	1260162	Valve Cap (300 in/lbs)	6
	1260162T	Valve Cap 1/4" threaded (300 in/lbs)	1
	1260163	Valve Cap 1/8" threaded (300 in/lbs)	1
4	960160	O-Ring	6
5	1269050	Complete valve	6
6	880830	O-Ring	6
7	1260140	Support ring reducer Ø18to Ø15	3
	1260141	Brass Support ring ❍ ⚲	3
	1520120	Support ring 15mm ❒ ◆	3
8	1260130	High pressure packing	3
9	1260151	Piston guide	3
10	1260420	O-Ring	3
11	1260440	Low pressure seal	3
12	1260460	Oil seal	3
13	1320320	Bearing cap	1
14	1320360	O-Ring	1
15	1260790	Circlip	1
16	1320370	Bearing	1
17	1320330	Bushing	1
18	1320010	Pump housing	1
19	880130	Vented oil cap	1
20	1260110	Nut (106 in/lbs)	3
21	1260100	Washer	3
22	1260120	Plunger	3
23	480480	O-Ring	3
24	1260091	Washer (slinger)	3
25	1260070	Plunger rod	3
26	1260080	Plunger rod pin	3
27	1260760	Bolt (48 in/lbs)	6
28	1329010	Rear cover	1
29	1260430	Snap ring	1
30	1260250	Oil sight glass	1
31	1140450	O-Ring	1
32	1260060	Con-rod (Alum.)	3
	1320140	Con-rod (Bronze)	3
33	1260040	Gasket	1
34	740290	O-Ring	2
35	1980740	Brass plug 3/8G	2
36	1262220	Pump head (Alum.) ❍ ⚲	1
	1320022	Pump head (Brass) ❒ ◆	1

Pos.	Code	Description	Qty.
37	180101	O-Ring	1
38	820361	Brass plug 1/2G	1
39	1322150	Crankshaft ❍ ❒	1
	1321790	Crankshaft ⚲ ◆	1
40	1380520	Key	1
41	1320370	Bearing	1
42	1260750	Oil seal	1
43	1260470	Bolt	4
44	1263890	Mounting rail	2
44b	1836	1/2" Rail Kit	1
44c	1836H	1-5/8" Rail Kit	1
45	480671	Oil seal	1
46	1321800	Hollow shaft Ø3/4" ❍ ❒	1
	1321810	Hollow shaft Ø3/4" ⚲ ◆	1
47	1321190	Bearing	1
48	1579	Gas engine flange	1
49	1200430	Bolt	1
50	621710	Bolt	1
51	1321820	Hollow shaft Ø5/8" ❍ ❒	1
	1321830	Hollow shaft Ø5/8" ⚲ ◆	1
52	1321190	Bearing	1
53	650610	Bolt	1
54	1584	Electric motor flange	1
55	1200430	Bolt	1
56	780230	Washer	1
57	390430	Bolt	1
58	1321780	Bolt	1
59	1321420	Side cover	1
60	1260790	Circlip	1
61	1321080	Snap ring	1
62	1381550	Washer	6
63	1269261	Complete pump head Alum. ❍ ⚲	1
	1269209	Complete pump head brass ❒ ◆	1
64	1266740	Cap	1

Legend

Ø15 For ❍	Ø15 For ❒	Ø15 For ⚲	Ø15 For ◆
XTV2G15	XTV2G18	XTV3G10	XTV3G16
	XTV2G20		XTV3G18
	XTV2G22		XTV3G20
			XTV3G22

Repair Kits

Water Seals		Valves		Pistons		Oil Seals	
						Kit 1860 E&D Version	
Kit 1866		Kit 1864		Kit 2628		Kit 1872 N Version	
Pos.	Qty.	Pos.	Qty.	Pos.	Qty.	Pos.	Qty.
7	3	5	6	20	3	12	3
8	3	6	6	21	3	33	1
10	3			22	3	42 N Version	1
11	3			23	3	45 E&D Version	1
				24	3	64	1

Special Parts

Code	Description	Qty.
2815	Kit for up to 180° F Ø15 High Temp	1
2029	Viton water seals Ø15	1